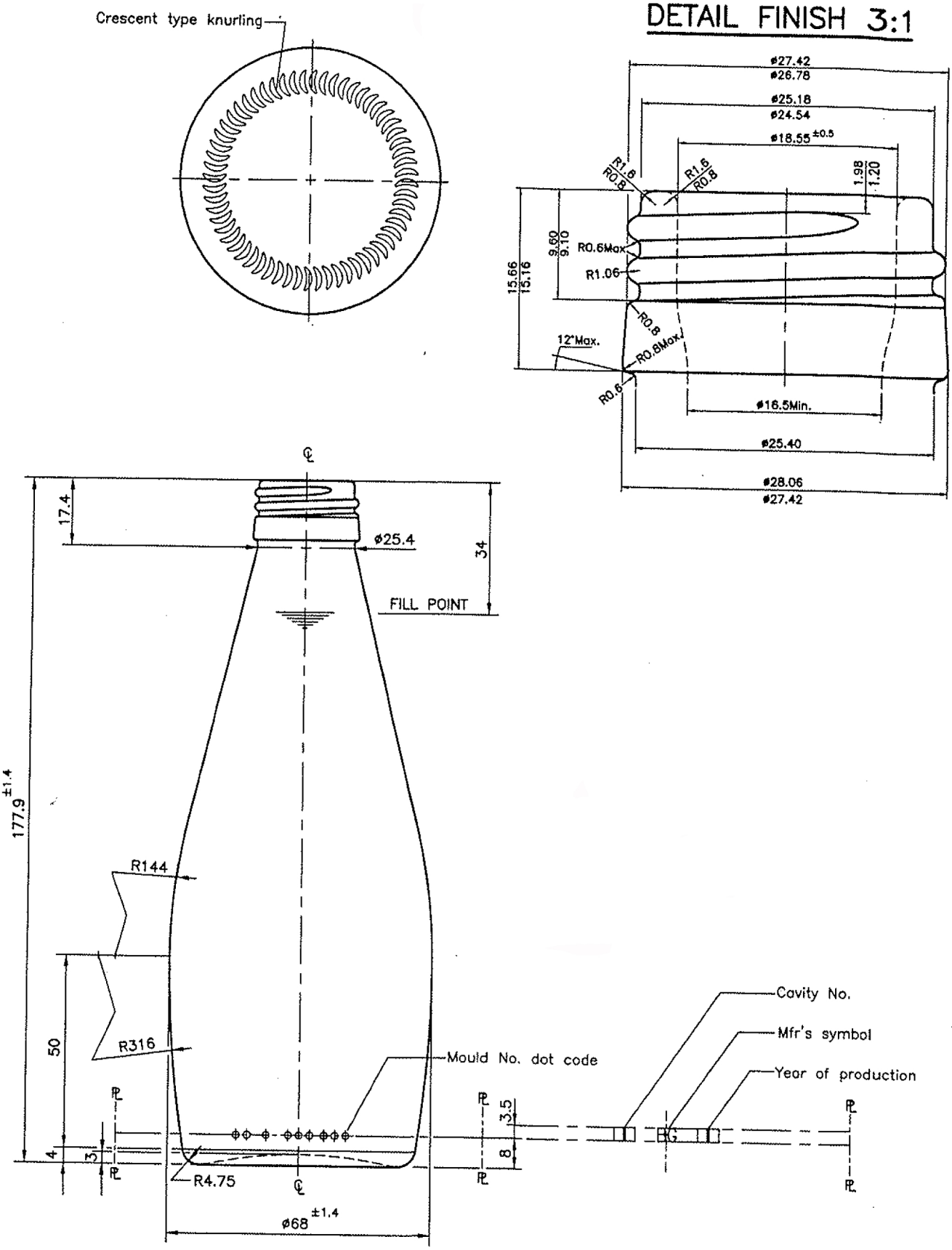
DETAIL FINISH 3:1
Crescent type knurling
ø27.42
ø26.78
ø25.18
ø24.54
ø18.55 ±0.5
R1.6
R0.8
R1.6
R0.8
1.98
1.20
9.60
9.10
R0.6Max
R1.06
15.66
15.16
R0.8
12°Max.
R0.8Max
R0.6
ø16.5Min.
ø25.40
ø28.06
ø27.42
℄
17.4
ø25.4
34
FILL POINT
177.9 ±1.4
R144
50
R316
Mould No. dot code
Cavity No.
Mfr's symbol
Year of production
3.5
8
4
3
R4.75
ø68 ±1.4